PH TECH CORP

S-7500 SLIDING PATIO DOOR (NON-HVHZ)(NON-IMPACT)

GENERAL NOTES:

1. THE PRODUCT SHOWN HEREIN IS DESIGNED AND MANUFACTURED TO COMPLY WITH THE CURRENT FLORIDA BUILDING CODE (FBC), **EXCLUDING** HVHZ AND HAS BEEN EVALUATED ACCORDING TO THE FOLLOWING:
   - AAMA/WDMA/CSA 101/I.S.2/A440-08/11/17

2. ADEQUACY OF THE EXISTING STRUCTURAL CONCRETE/MASONRY, 2X AND METAL STUD FRAMING AS A MAIN WIND FORCE RESISTING SYSTEM CAPABLE OF WITHSTANDING AND TRANSFERRING APPLIED PRODUCT LOADS TO THE FOUNDATION IS THE RESPONSIBILITY OF THE ENGINEER OR ARCHITECT OF RECORD FOR THE PROJECT OF INSTALLATION.

3. 1X AND 2X BUCKS (WHEN USED) SHALL BE DESIGNED AND ANCHORED TO PROPERLY TRANSFER ALL LOADS TO THE STRUCTURE. BUCK DESIGN AND INSTALLATION IS THE RESPONSIBILITY OF THE ENGINEER OR ARCHITECT OF RECORD FOR THE PROJECT OF INSTALLATION.

4. THE INSTALLATION DETAILS DESCRIBED HEREIN ARE GENERIC AND MAY NOT REFLECT ACTUAL CONDITIONS FOR A SPECIFIC SITE. IF SITE CONDITIONS CAUSE INSTALLATION TO DEVIATE FROM THE REQUIREMENTS DETAILED HEREIN, A LICENSED ENGINEER OR ARCHITECT SHALL PREPARE SITE SPECIFIC DOCUMENTS FOR USE WITH THIS DOCUMENT.

5. APPROVED IMPACT PROTECTIVE SYSTEM **IS REQUIRED** TO PROTECT THIS PRODUCT IN AREAS REQUIRING IMPACT RESISTANCE.

6. FRAME MATERIAL: UPVC

7. GLASS SHALL MEET THE REQUIREMENTS OF ASTM E1300. SEE GLAZING DETAILS ON SHEET 1.

8. DESIGNATIONS "X", "O" STAND FOR THE FOLLOWING:
   X: OPERABLE PANEL
   O: FIXED PANEL

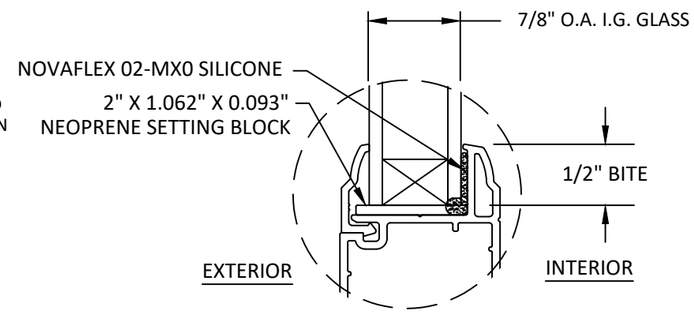

GLAZING DETAIL

GLAZING NOTES:
1. GLASS TYPE SHALL COMPLY WITH ASTM E1300 & FBC SAFETY REQUIREMENTS.
2. SETTING BLOCKS TO BE LOCATED AT 1/4 SPAN LENGTH FOR GLASS WIDER THAN 36" AS PER FBC CHAPTER 24.
3. SETTING BLOCK DUROMETER HARDNESS OF 70-90 (SHORE A) AS REFERENCED IN FBC CHAPTER 24.
4. GLASS TYPE SHALL COMPLY WITH APPLICABLE GLAZING REQUIREMENTS PER CHAPTER 24 OF THE FBC

TABLE OF CONTENTS

SHEET	SHEET DESCRIPTION
1	GENERAL NOTES AND GLAZING DETAILS
2	ELEVATION AND ANCHOR LAYOUT
3	ELEVATION AND ANCHOR LAYOUT
4	ELEVATION AND ANCHOR LAYOUT
5	ELEVATION AND ANCHOR LAYOUT
6	VERTICAL SECTIONS
7	HORIZONTAL SECTIONS
8	ANCHOR DETAILS, ANCHOR SCHEDULE, & INSTALLATION NOTES

DESIGN PRESSURE TABLE

CONFIGURATION	DESIGN PRESSURE	FRAME SIZES	MISSILE IMPACT RATING
OX	+60/-60 PSF	70.87" x 81.89"	NON-IMPACT
OX	+35/-35 PSF	96" x 96"	
OXO	+40/-40 PSF	106.29" x 96"	
OXO	+45/-45 PSF	106.3" x 81.89"	
XOO	+40/-40 PSF	103.50" x 96"	
OXXO	+35/-35 PSF	139.49" x 81.89"	
OXXO	+40/-40 PSF	139.4" x 96"	

PH TECH CORP.
724 BRICKWORKS DRIVE
LEETSDALE, PA 15056
418-833-3231

TITLE: PH TECH CORP S-7500 SLIDING PATIO DOOR (NON-HVHZ)(NON-IMPACT) GENERAL NOTES AND GLAZING DETAILS

PREPARED BY:
BUILDING DROPS, INC.
398 E. DANIA BEACH BLVD., STE. 338
DANIA BEACH, FL 33004
PH: (954)399-8478
FAX: (954)744.4738
WEB: www.buildingdrops.com

REMARKS	BY	DATE

THE INSTALLATION DETAILS DESCRIBED HEREIN ARE GENERIC AND MAY NOT REFLECT ACTUAL CONDITIONS FOR A SPECIFIC SITE. IF SITE CONDITIONS CAUSE INSTALLATION TO DEVIATE FROM THE REQUIREMENTS DETAILED HEREIN, A LICENSED ENGINEER OR ARCHITECT SHALL PREPARE SITE SPECIFIC DOCUMENTS FOR USE WITH THIS DOCUMENT.

Digitally signed by Hermes F Norero
Reason: I am approving this document
Date: 2021.12.13 11:16:49 -05'00'

HERMES F. NORERO
LICENSE No. 73778
STATE OF FLORIDA
PROFESSIONAL ENGINEER

HERMES F. NORERO, P.E.
FLORIDA P.E. No 73778
BUILDING DROPS, INC
398 E. DANIA BEACH BLVD. # 338
DANIA BEACH, FL 33004
FBPE CERT. OF AUTHORIZATION No. 29578

FL40257

DATE: 09.15.21

DWG. BY: AC | CHK. BY: SM

SCALE: NTS

DWG. #: PHT001

SHEET 1 OF 8

11/15/2021 12:47 PM
s:\projects\ph tech, inc\fbc-21-0908 - fbc submittal - s-7500, s-8750,8770, s-8375, s-8385, s-8500, s4200, s-8750\dwgs\series s-7500\pht001.dwg

11/15/2021 12:47 PM
s:\projects\ph tech, inc\fbc-21-0908 - fbc submittal - s-7500, s-8750,8770, s-8375, s-8385, s-8500, s4200, s-8750\dwgs\series s-7500\pht001.dwg

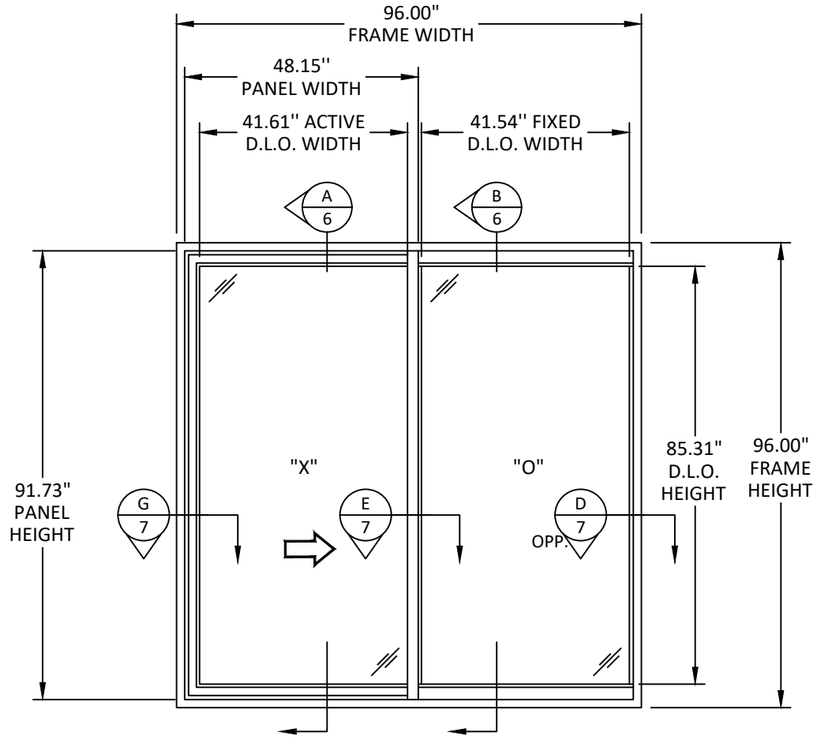

ELEVATION

SLIDING DOOR

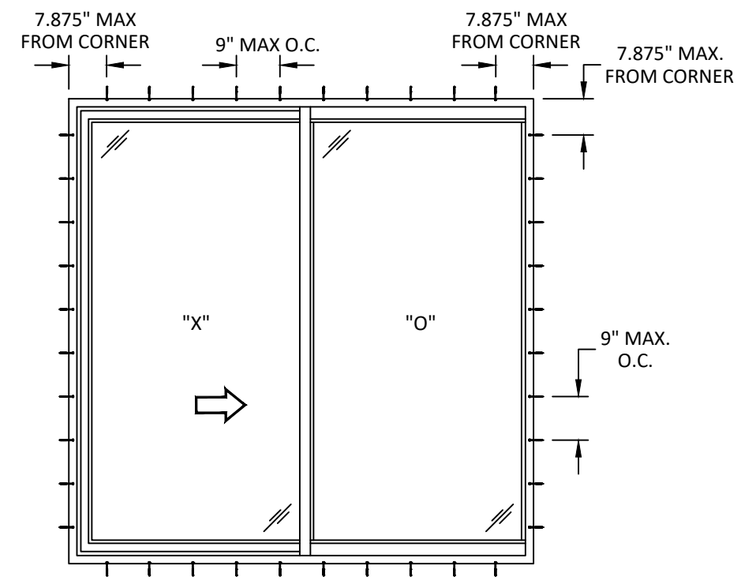

ANCHOR LAYOUT

SLIDING DOOR
THROUGH FRAME

QUALIFIED CONFIGURATIONS

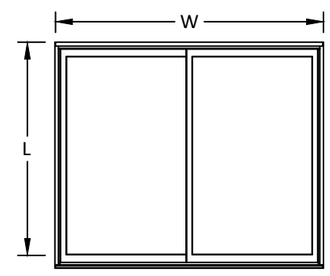

2 PANEL
OX
XO

PH TECH CORP.
724 BRICKWORKS DRIVE
LEETSDALE, PA 15056
418-833-3231

TITLE: PH TECH CORP
S-7500 SLIDING PATIO DOOR
(NON-HVHZ)(NON-IMPACT)
ELEVATION AND ANCHOR LAYOUT

PREPARED BY:
BUILDING DROPS, INC.
398 E. DANIA BEACH BLVD., STE. 338
DANIA BEACH, FL 33004
PH: (954)399-8478
FAX: (954)744.4738
WEB: www.buildingdrops.com

REMARKS	BY	DATE

THE INSTALLATION DETAILS DESCRIBED HEREIN ARE GENERIC AND MAY NOT REFLECT ACTUAL CONDITIONS FOR A SPECIFIC SITE. IF SITE CONDITIONS CAUSE INSTALLATION TO DEVIATE FROM THE REQUIREMENTS DETAILED HEREIN, A LICENSED ENGINEER OR ARCHITECT SHALL PREPARE SITE SPECIFIC DOCUMENTS FOR USE WITH THIS DOCUMENT.

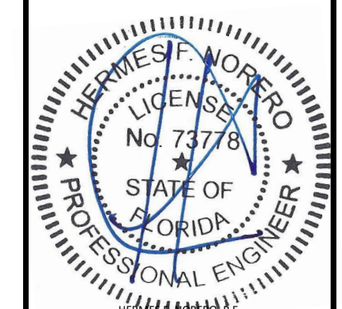

HERMES F. NORERO, P.E.
FLORIDA P.E. No 73778
BUILDING DROPS, INC
398 E. DANIA BEACH BLVD. # 338
DANIA BEACH, FL 33004
FBPE CERT. OF AUTHORIZATION No. 29578

FL40257

DATE: 09.15.21

DWG. BY: AC | CHK. BY: SM

SCALE: NTS

DWG. #: PHT001

SHEET 2 OF 8

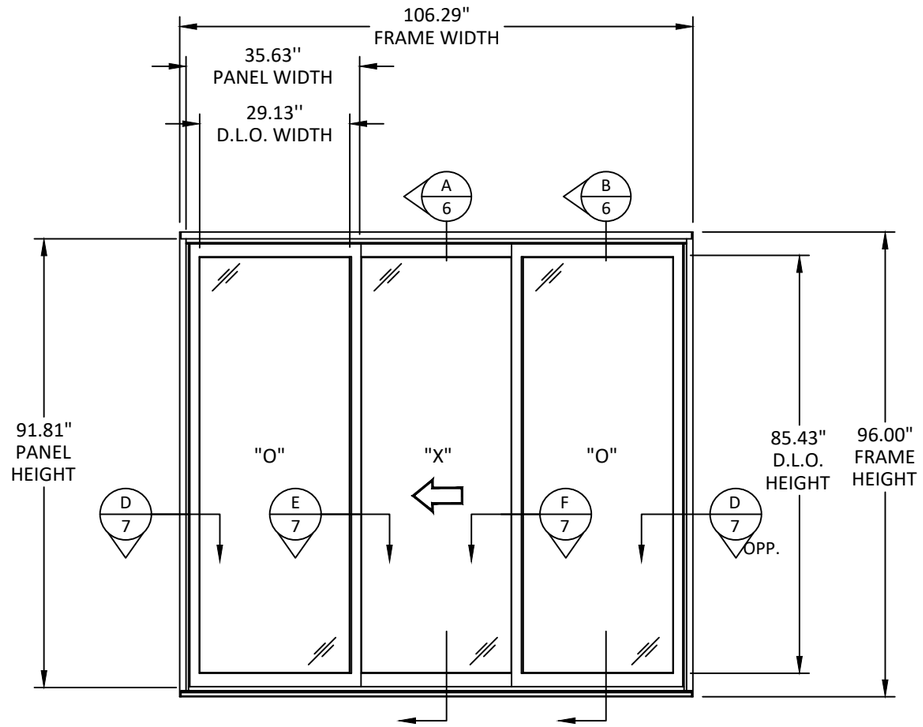

ELEVATION

SLIDING DOOR

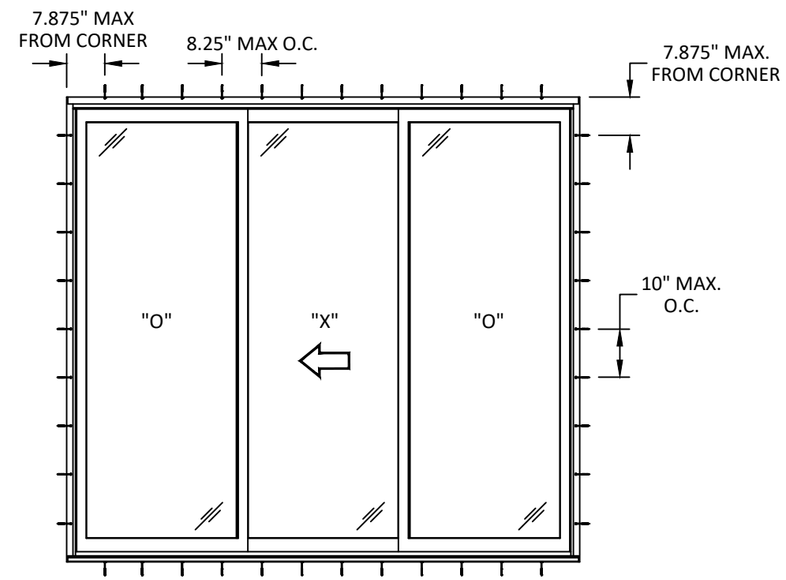

ANCHOR LAYOUT

SLIDING DOOR
THROUGH FRAME

QUALIFIED CONFIGURATIONS

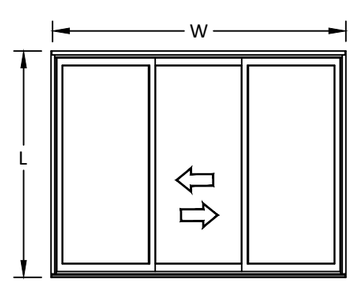

3 PANEL
OXO

PH TECH CORP.
724 BRICKWORKS DRIVE
LEETSDALE, PA 15056
418-833-3231

TITLE: PH TECH CORP
S-7500 SLIDING PATIO DOOR
(NON-HVHZ)(NON-IMPACT)
ELEVATION AND ANCHOR LAYOUT

PREPARED BY:
BUILDING DROPS, INC.
398 E. DANIA BEACH BLVD., STE. 338
DANIA BEACH, FL 33004
PH: (954)399-8478
FAX: (954)744.4738
WEB: www.buildingdrops.com

REMARKS	BY	DATE

THE INSTALLATION DETAILS DESCRIBED HEREIN ARE GENERIC AND MAY NOT REFLECT ACTUAL CONDITIONS FOR A SPECIFIC SITE. IF SITE CONDITIONS CAUSE INSTALLATION TO DEVIATE FROM THE REQUIREMENTS DETAILED HEREIN, A LICENSED ENGINEER OR ARCHITECT SHALL PREPARE SITE SPECIFIC DOCUMENTS FOR USE WITH THIS DOCUMENT.

HERMES F. NORERO
LICENSE
No. 73778
STATE OF
FLORIDA
PROFESSIONAL ENGINEER

HERMES F. NORERO, P.E.
FLORIDA P.E. No 73778
BUILDING DROPS, INC
398 E. DANIA BEACH BLVD. # 338
DANIA BEACH, FL 33004
FBPE CERT. OF AUTHORIZATION No. 29578

FL40257

DATE: 09.15.21

DWG. BY: AC
CHK. BY: SM

SCALE: NTS

DWG. #: PHT001

SHEET 3 OF 8

11/15/2021 12:47 PM
s:\projects\ph tech. inc\fbc-21-0908 - fbc submittal - s-7500, s-8750,8770, s-8375, s-8385, s-8500, s4200, s-8750\dwgs\series s-7500\pht001.dwg

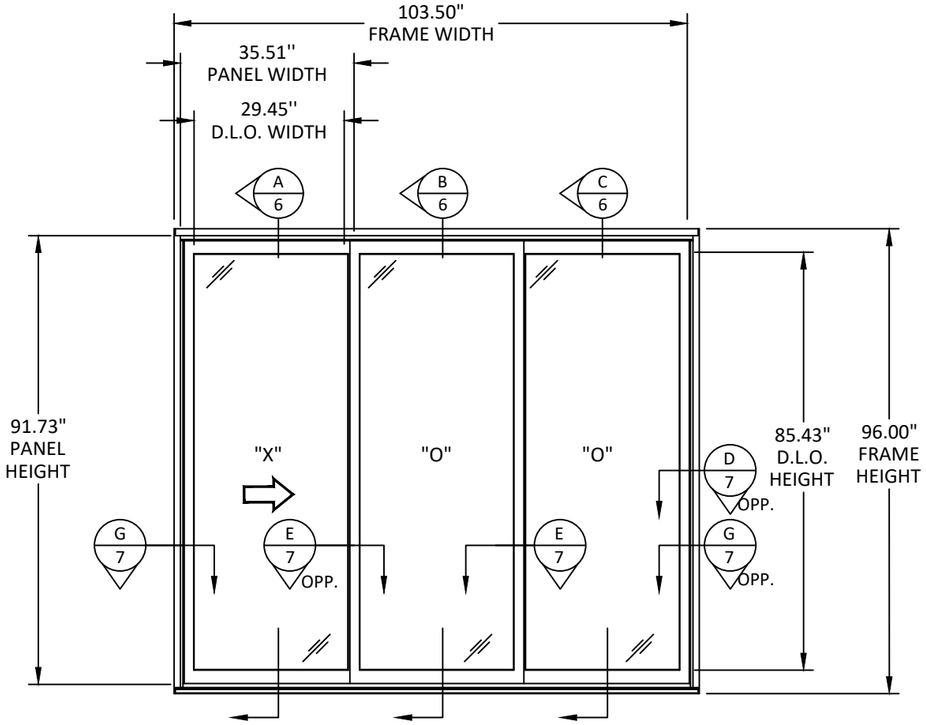

ELEVATION

SLIDING DOOR

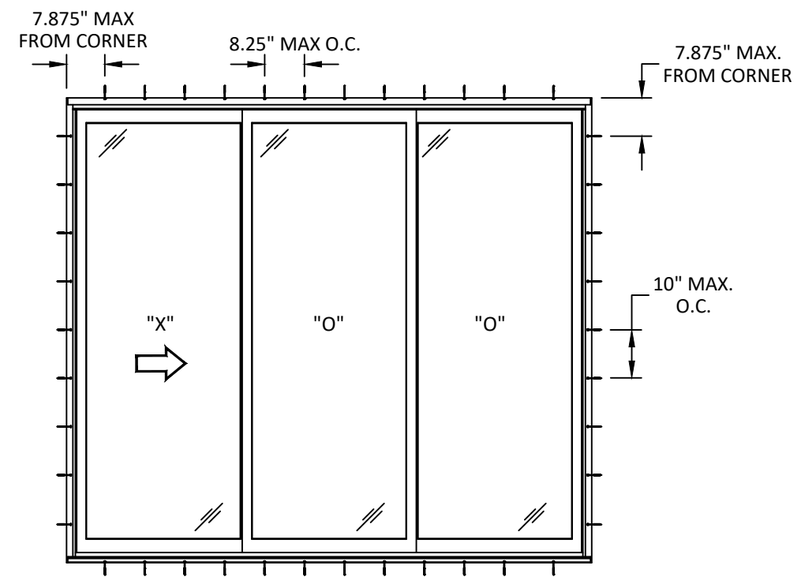

ANCHOR LAYOUT

SLIDING DOOR
THROUGH FRAME

QUALIFIED CONFIGURATIONS

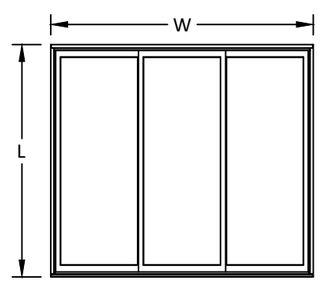

3 PANEL
XOO
OOX
XOX

PH TECH CORP.
724 BRICKWORKS DRIVE
LEETSDALE, PA 15056
418-833-3231

TITLE: PH TECH CORP
S-7500 SLIDING PATIO DOOR
(NON-HVHZ)(NON-IMPACT)
ELEVATION AND ANCHOR LAYOUT

PREPARED BY:
BUILDING DROPS, INC.
398 E. DANIA BEACH BLVD., STE. 338
DANIA BEACH, FL 33004
PH: (954)399-8478
FAX: (954)744.4738
WEB: www.buildingdrops.com

REMARKS	BY	DATE

THE INSTALLATION DETAILS DESCRIBED HEREIN ARE GENERIC AND MAY NOT REFLECT ACTUAL CONDITIONS FOR A SPECIFIC SITE. IF SITE CONDITIONS CAUSE INSTALLATION TO DEVIATE FROM THE REQUIREMENTS DETAILED HEREIN, A LICENSED ENGINEER OR ARCHITECT SHALL PREPARE SITE SPECIFIC DOCUMENTS FOR USE WITH THIS DOCUMENT.

HERMES F. NORERO
LICENSE
No. 73778
STATE OF
FLORIDA
PROFESSIONAL ENGINEER

HERMES F. NORERO, P.E.
FLORIDA P.E. No 73778
BUILDING DROPS, INC
398 E. DANIA BEACH BLVD. # 338
DANIA BEACH, FL 33004
FBPE CERT. OF AUTHORIZATION No. 29578

FL40257

DATE: 09.15.21

DWG. BY: AC

CHK. BY: SM

SCALE: NTS

DWG. #: PHT001

SHEET 4 OF 8

11/15/2021 12:47 PM
s:\projects\ph tech, inc\fbc-21-0908 - fbc submittal - s-7500, s-8750,8770, s-8375, s-8385, s-8500, s4200, s-8750\dwgs\series s-7500\pht001.dwg

11/15/2021 12:47 PM
s:\projects\ph tech, inc\fbc-21-0908 - fbc submittal - s-7500, s-8750,8770, s-8375, s-8385, s-8500, s4200, s-8750\dwgs\series s-7500\pht001.dwg

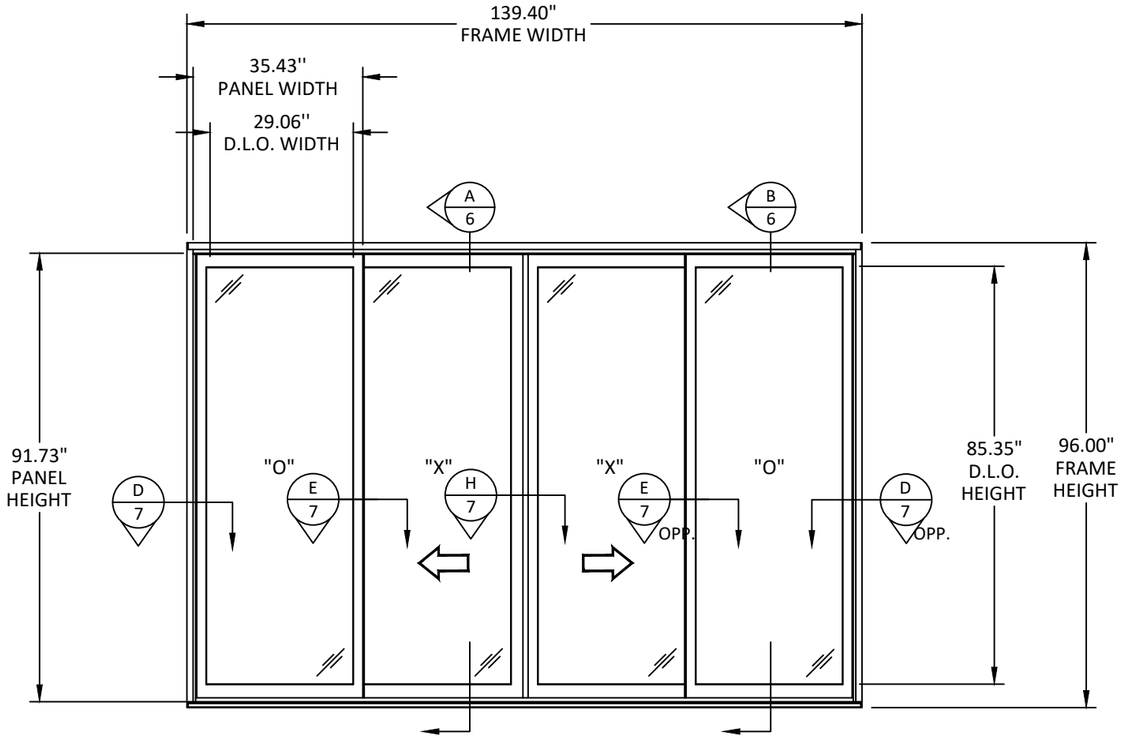

ELEVATION

SLIDING DOOR

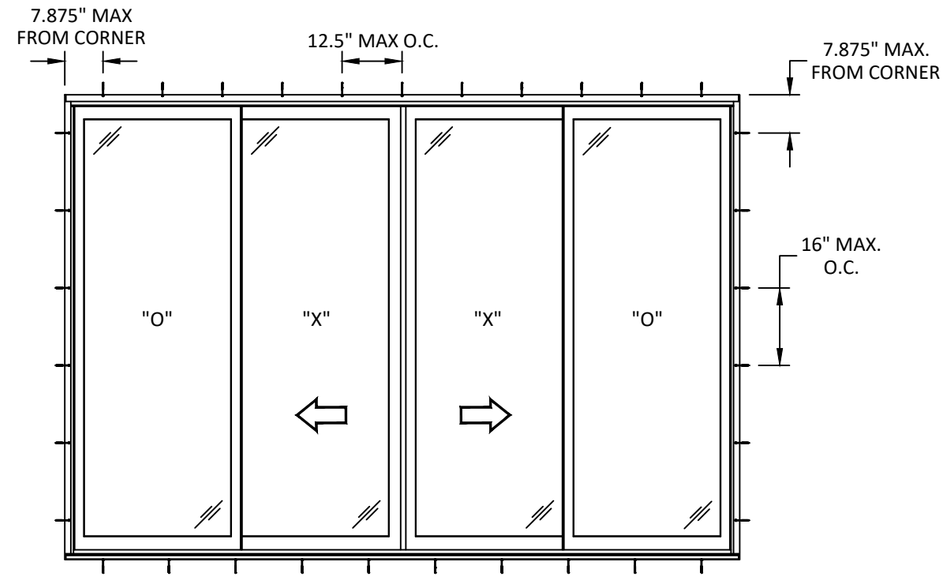

ANCHOR LAYOUT

SLIDING DOOR
THROUGH FRAME

QUALIFIED CONFIGURATIONS

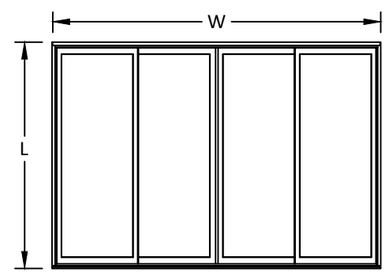

4 PANEL
OXXO

PH TECH CORP.
724 BRICKWORKS DRIVE
LEETSDALE, PA 15056
418-833-3231

TITLE: PH TECH CORP
S-7500 SLIDING PATIO DOOR
(NON-HVHZ)(NON-IMPACT)
ELEVATION AND ANCHOR LAYOUT

PREPARED BY:
BUILDING DROPS, INC.
398 E. DANIA BEACH BLVD., STE. 338
DANIA BEACH, FL 33004
PH: (954)399-8478
FAX: (954)744.4738
WEB: www.buildingdrops.com

REMARKS	BY	DATE

THE INSTALLATION DETAILS DESCRIBED HEREIN ARE GENERIC AND MAY NOT REFLECT ACTUAL CONDITIONS FOR A SPECIFIC SITE. IF SITE CONDITIONS CAUSE INSTALLATION TO DEVIATE FROM THE REQUIREMENTS DETAILED HEREIN, A LICENSED ENGINEER OR ARCHITECT SHALL PREPARE SITE SPECIFIC DOCUMENTS FOR USE WITH THIS DOCUMENT.

HERMES F. NORERO
LICENSE
No. 73778
STATE OF
FLORIDA
PROFESSIONAL ENGINEER

HERMES F. NORERO, P.E.
FLORIDA P.E. No 73778
BUILDING DROPS, INC
398 E. DANIA BEACH BLVD. # 338
DANIA BEACH, FL 33004
FBPE CERT. OF AUTHORIZATION No. 29578

FL40257

DATE: 09.15.21

DWG. BY: AC | CHK. BY: SM

SCALE: NTS

DWG. #: PHT001

SHEET 5 OF 8

11/15/2021 12:47 PM
s:\projects\ph tech, inc\fbc-21-0908 - fbc submittal - s-7500, s-8750,8770, s-8375, s-8385, s-8500, s4200, s-8750\dwgs\series s-7500\pht001.dwg

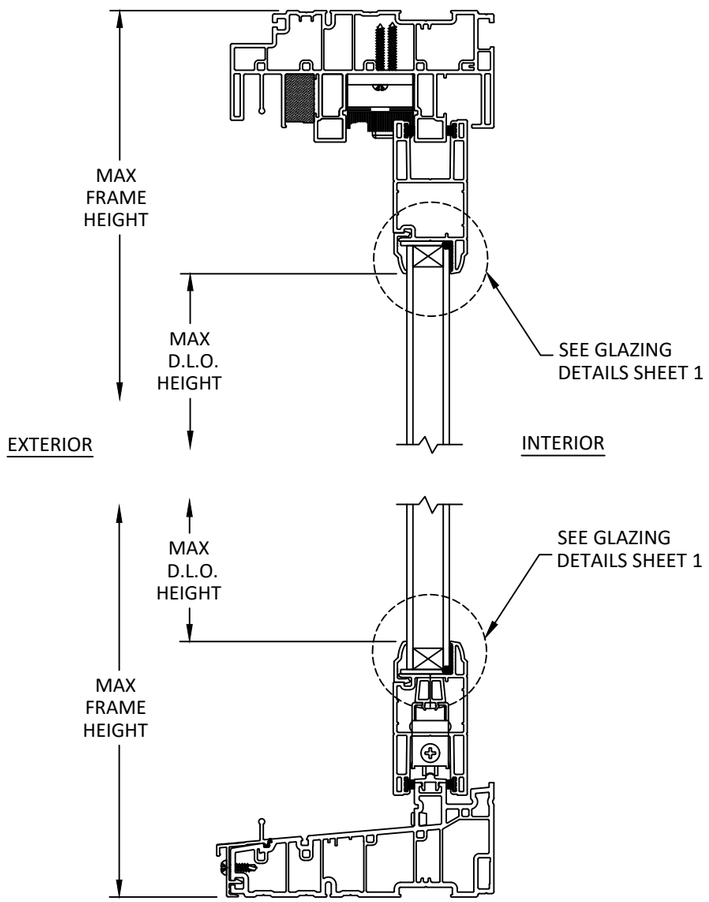

A/6 **VERTICAL SECTION**

OPERABLE PANEL

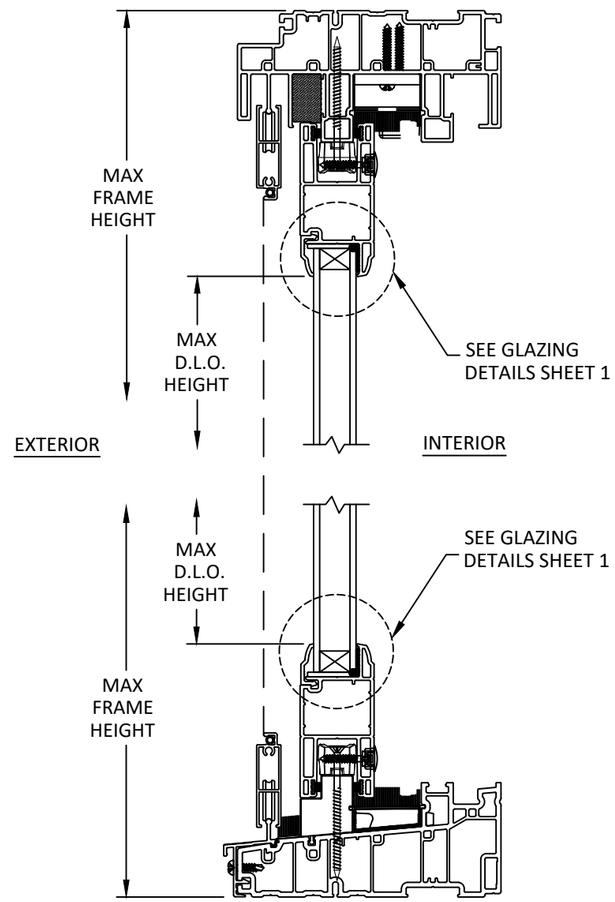

B/6 **VERTICAL SECTION**

FIXED PANEL

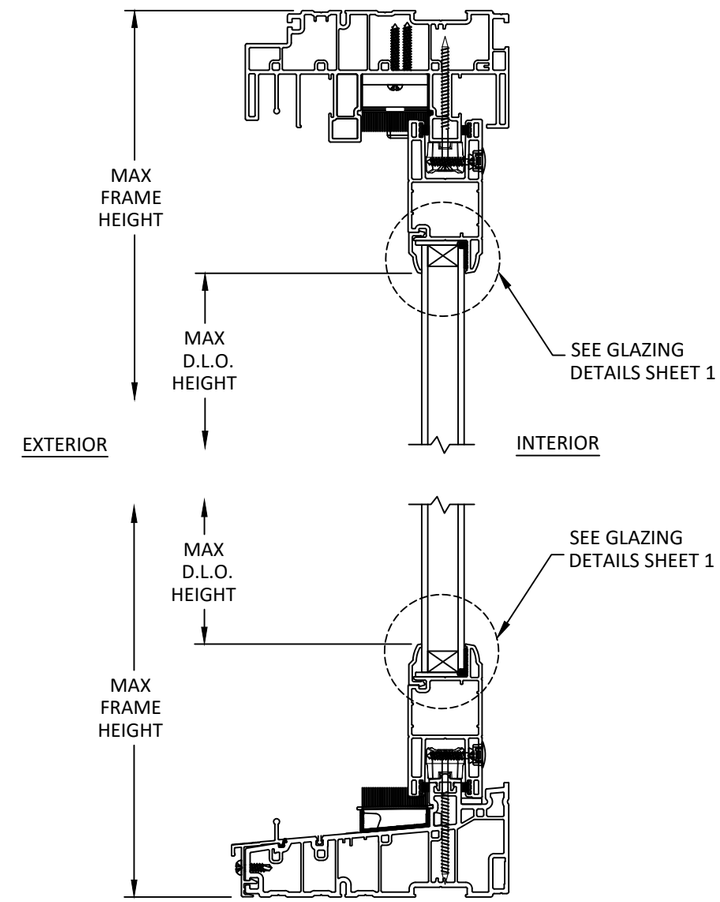

C/6 **VERTICAL SECTION**

FIXED PANEL

PH TECH CORP.
724 BRICKWORKS DRIVE
LEETSDALE, PA 15056
418-833-3231

TITLE: PH TECH CORP
S-7500 SLIDING PATIO DOOR
(NON-HVHZ)(NON-IMPACT)
VERTICAL SECTIONS

PREPARED BY:
BUILDING DROPS, INC.
398 E. DANIA BEACH BLVD., STE. 338
DANIA BEACH, FL 33004
PH: (954)399-8478
FAX: (954)744.4738
WEB: www.buildingdrops.com

REMARKS	BY	DATE

THE INSTALLATION DETAILS DESCRIBED HEREIN ARE GENERIC AND MAY NOT REFLECT ACTUAL CONDITIONS FOR A SPECIFIC SITE. IF SITE CONDITIONS CAUSE INSTALLATION TO DEVIATE FROM THE REQUIREMENTS DETAILED HEREIN, A LICENSED ENGINEER OR ARCHITECT SHALL PREPARE SITE SPECIFIC DOCUMENTS FOR USE WITH THIS DOCUMENT.

HERMES F. NORERO
LICENSE
No. 73778
STATE OF
FLORIDA
PROFESSIONAL ENGINEER

HERMES F. NORERO, P.E.
FLORIDA P.E. No 73778
BUILDING DROPS, INC
398 E. DANIA BEACH BLVD. # 338
DANIA BEACH, FL 33004
FBPE CERT. OF AUTHORIZATION No. 29578

FL40257

DATE: 09.15.21

DWG. BY: AC

CHK. BY: SM

SCALE: NTS

DWG. #: PHT001

SHEET 6 OF 8

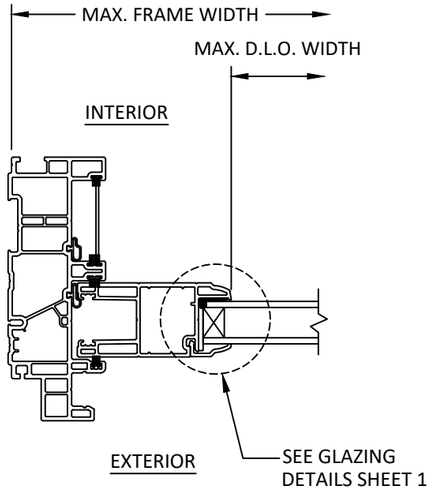

D/7 **HORIZONTAL SECTION**
FIXED JAMB

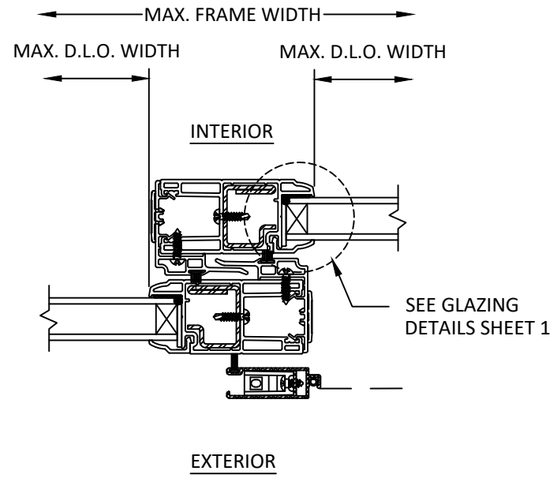

E/7 **HORIZONTAL SECTION**
INTERLOCK

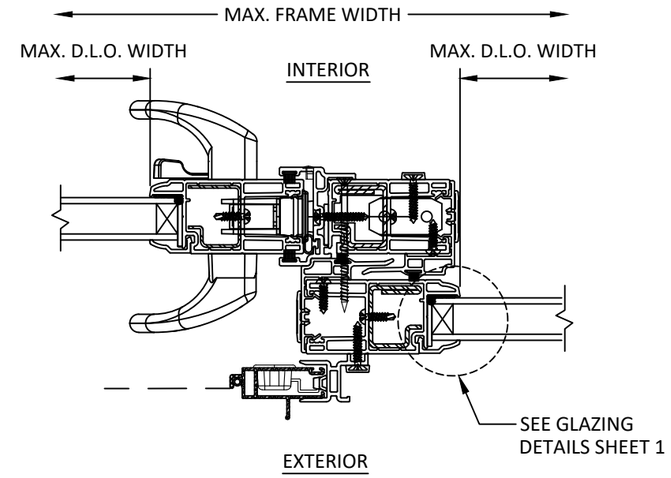

F/7 **HORIZONTAL SECTION**
INTERMEDIATE LOCK MULLION

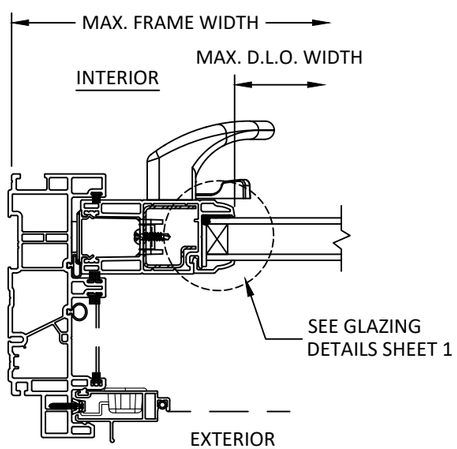

G/7 **HORIZONTAL SECTION**
LOCK JAMB

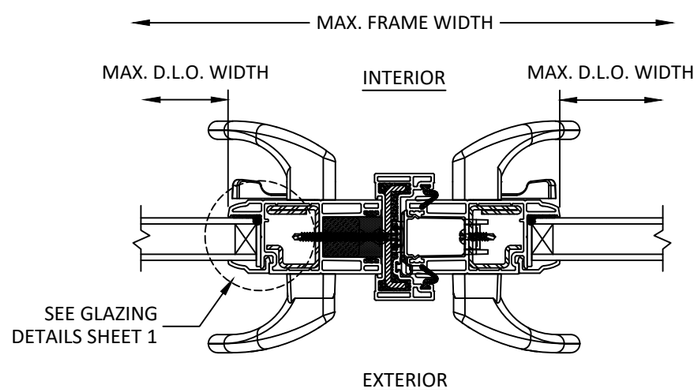

H/7 **HORIZONTAL SECTION**
MEETING STILES

PH TECH CORP.
724 BRICKWORKS DRIVE
LEETSDALE, PA 15056
418-833-3231

TITLE: PH TECH CORP
S-7500 SLIDING PATIO DOOR
(NON-HVHZ)(NON-IMPACT)
VERTICAL SECTIONS

PREPARED BY:
BUILDING DROPS, INC.
398 E. DANIA BEACH BLVD., STE. 338
DANIA BEACH, FL 33004
PH: (954)399-8478
FAX: (954)744.4738
WEB: www.buildingdrops.com

REMARKS	BY	DATE

THE INSTALLATION DETAILS DESCRIBED HEREIN ARE GENERIC AND MAY NOT REFLECT ACTUAL CONDITIONS FOR A SPECIFIC SITE. IF SITE CONDITIONS CAUSE INSTALLATION TO DEVIATE FROM THE REQUIREMENTS DETAILED HEREIN, A LICENSED ENGINEER OR ARCHITECT SHALL PREPARE SITE SPECIFIC DOCUMENTS FOR USE WITH THIS DOCUMENT.

HERMES F. NORERO
LICENSE
No. 73778
STATE OF
FLORIDA
PROFESSIONAL ENGINEER

HERMES F. NORERO, P.E.
FLORIDA P.E. No 73778
BUILDING DROPS, INC
398 E. DANIA BEACH BLVD. # 338
DANIA BEACH, FL 33004
FBPE CERT. OF AUTHORIZATION No. 29578

FL40257

DATE: 09.15.21

DWG. BY: AC
CHK. BY: SM

SCALE: NTS

DWG. #: PHT001

SHEET 7 OF 8

11/15/2021 12:47 PM
s:\projects\ph tech. inc\fbc-21-0908 - fbc submittal - s-7500, s-8750,8770, s-8375, s-8385, s-8500, s4200, s-8750\dwgs\series s-7500\pht001.dwg

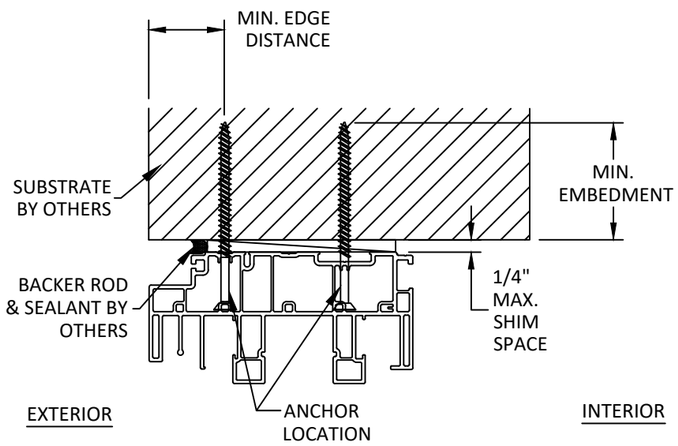

A/8 ANCHOR DETAIL
THROUGH FRAME

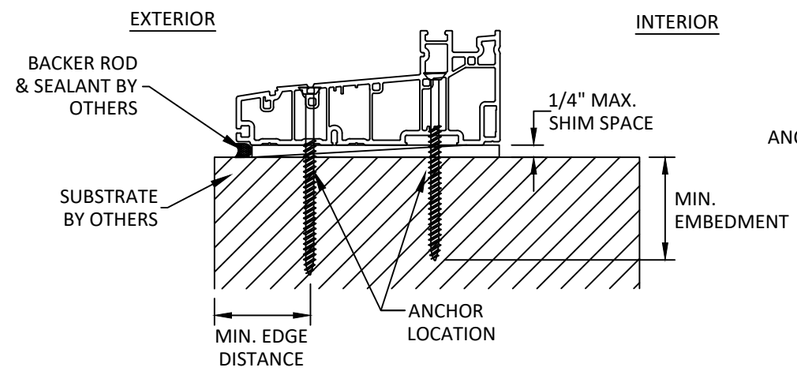

B/8 ANCHOR DETAIL
THROUGH FRAME

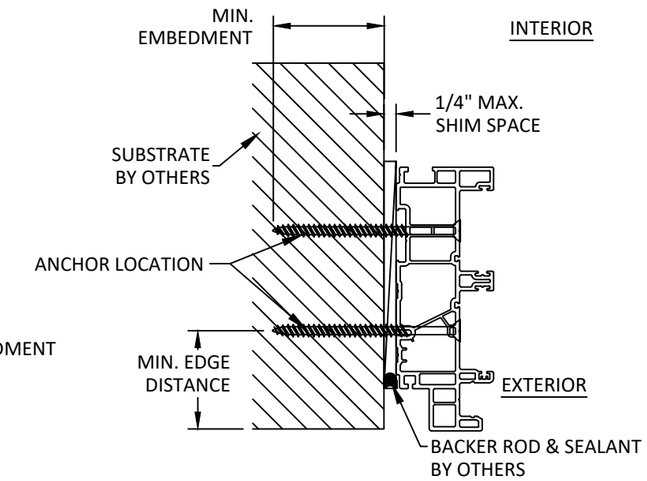

C/8 ANCHOR DETAIL
THROUGH FRAME

INSTALLATION NOTES:

1. TWO (2) INSTALLATION ANCHORS ARE REQUIRED AT EACH ANCHOR LOCATION SHOWN.
2. FOR MASONRY OR CONCRETE OPENINGS, A 1X WOOD BUCK MAY BE USED (OPTIONAL) AS LONG AS THE MINIMUM EMBEDMENT AND EDGE DISTANCE REQUIREMENTS ARE STILL MET WITHIN THE CORRESPONDING HOST SUBSTRATE. SEE GENERAL NOTE #3 ON SHEET 1 FOR MORE INFORMATION.
3. THE NUMBER OF INSTALLATION ANCHORS DEPICTED IS THE MINIMUM NUMBER OF ANCHORS TO BE USED FOR PRODUCT INSTALLATION OF THE MAXIMUM SIZE LISTED.
4. INSTALL INDIVIDUAL INSTALLATION ANCHORS WITHIN A TOLERANCE OF ±1/2 INCH THE DEPICTED LOCATION & SPACING IN THE ANCHOR LAYOUT DETAILS (I.E., WITHOUT CONSIDERATION OF TOLERANCES). TOLERANCES ARE NOT CUMULATIVE FROM ONE INSTALLATION ANCHOR TO THE NEXT.
5. SHIM AS REQUIRED AT EACH ANCHOR LOCATION WHERE SPACE BETWEEN PRODUCT AND STRUCTURE IS $\frac{1}{16}$ INCH OR GREATER. MAXIMUM ALLOWABLE SHIM STACK IS NOT TO EXCEED 1/4 INCH. ALL SHIMS ARE TO BE LOADED BEARING, HIGH DENSITY PLASTIC OR BETTER.
6. MINIMUM EMBEDMENT AND EDGE DISTANCE EXCLUDE WALL FINISHES, INCLUDING BUT NOT LIMITED TO STUCCO, FOAM, BRICK VENEER, AND SIDING.
7. INSTALLATION ANCHORS AND ASSOCIATED HARDWARE MUST BE MADE OF CORROSION RESISTANT MATERIAL OR HAVE A CORROSION RESISTANT COATING.
8. FOR HOLLOW BLOCK AND GROUT FILLED BLOCK, DO NOT INSTALL INSTALLATION ANCHORS INTO MORTAR JOINTS. EDGE DISTANCE IS MEASURED FROM FREE EDGE OF BLOCK OR EDGE OF MORTAR JOINT INTO FACE SHELL OF BLOCK.
9. INSTALLATION ANCHORS SHALL BE INSTALLED IN ACCORDANCE WITH ANCHOR MANUFACTURER'S INSTALLATION INSTRUCTIONS, AND ANCHORS SHALL NOT BE USED IN SUBSTRATES WITH STRENGTHS LESS THAN THE MINIMUM STRENGTH SPECIFIED BY THE ANCHOR MANUFACTURER.

ANCHOR SCHEDULE

METHOD	SUBSTRATE	ANCHOR	MIN. EMBEDMENT	MIN. EDGE DISTANCE
THROUGH FRAME	2X WOOD MIN. S.G.= 0.55	#10 WOOD SCREW	1.500"	0.750"
	GROUT FILLED CMU PER ASTM C-90 W/ MIN. f'c=2,000 PSI	3/16" ITW TAPCON (CARBON OR STAINLESS STEEL)	1.000"	2.500"
	CONCRETE W/ MIN. f'c = 3,000 PSI		1.250"	2.500"
	METAL: 18 GAUGE STEEL, MIN. Fy = 33 KSI	#10-24 GR. 5 SMS OR SELF-DRILLING SCREW	3 THREADS MIN PENETRATION BEYOND METAL	0.750"

PH TECH CORP.
724 BRICKWORKS DRIVE
LEETSDALE, PA 15056
418-833-3231

TITLE: PH TECH CORP S-7500 SLIDING PATIO DOOR (NON-HVHZ)(NON-IMPACT)
ANCHOR DETAILS, ANCHOR SCHEDULE, & INSTALLATION NOTES

PREPARED BY: BUILDING DROPS, INC.
398 E. DANIA BEACH BLVD., STE. 338
DANIA BEACH, FL 33004
PH: (954)399-8478
FAX: (954)744.4738
WEB: www.buildingdrops.com

REMARKS	BY	DATE

THE INSTALLATION DETAILS DESCRIBED HEREIN ARE GENERIC AND MAY NOT REFLECT ACTUAL CONDITIONS FOR A SPECIFIC SITE. IF SITE CONDITIONS CAUSE INSTALLATION TO DEVIATE FROM THE REQUIREMENTS DETAILED HEREIN, A LICENSED ENGINEER OR ARCHITECT SHALL PREPARE SITE SPECIFIC DOCUMENTS FOR USE WITH THIS DOCUMENT.

HERMES F. NORERO LICENSE No. 73778 STATE OF FLORIDA PROFESSIONAL ENGINEER

HERMES F. NORERO, P.E.
FLORIDA P.E. No 73778
BUILDING DROPS, INC
398 E. DANIA BEACH BLVD. # 338
DANIA BEACH, FL 33004
FBPE CERT. OF AUTHORIZATION No. 29578

FL40257

DATE: 09.15.21
DWG. BY: AC
CHK. BY: SM
SCALE: NTS
DWG. #: PHT001
SHEET 8 OF 8

11/15/2021 12:47 PM
s:\projects\ph tech. inc\fbc-21-0908 - fbc submittal - s-7500\ s-8750.8770\ s-8375\ s-8385\ s-8500\ s4200\ s-8750\dwgs\series s-7500\pht001.dwg